Roof only
-view from the front-

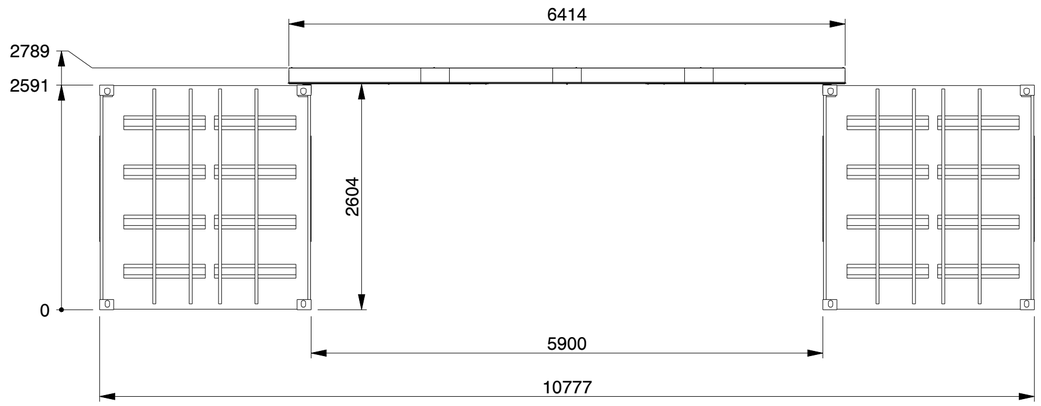

ISO containers

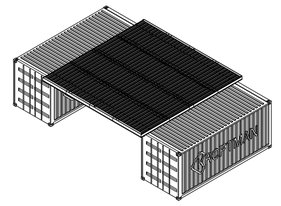

SCALE 1:200

Roof only
-view from the front-

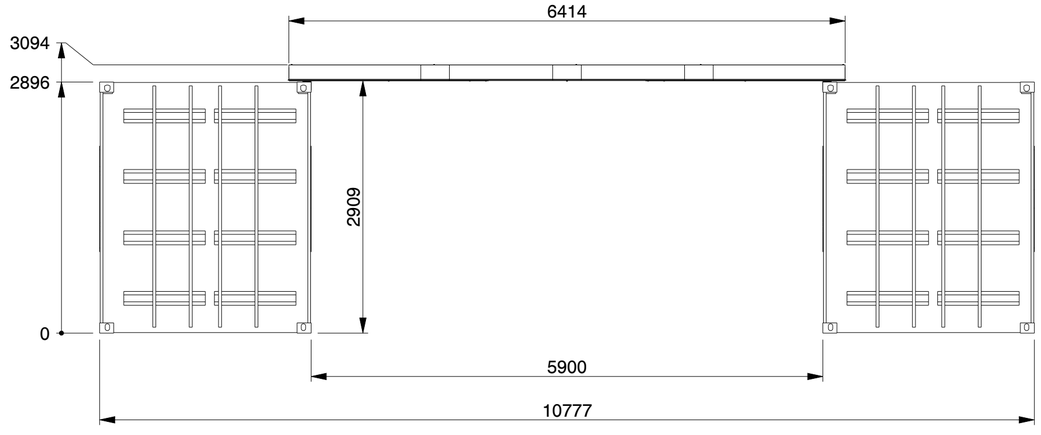

High-Cube containers

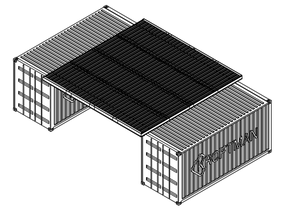

SCALE 1:200

KROFTMAN®

LASERCUT ACCORDING: EN-ISO 9013-5-4-1 MATERIAL CERTIFICATE: 3.1 (OR 2.2 WHEN S235JR) GALVANIZING ACCORDING: EN ISO 1461 BEND RADIUS UNLESS DEFINED Ri = t			MATERIAL: See List	
			TREATMENT: None	
TOLERANCES UNLESS OTHERWISE SPECIFIED:			STATUS: Released	
GENERAL ROUGHNESS Ra x	DIMENSION: ±x	ANGLE: ±x°	MODEL NUMBER TCA0311	REVISION: 1
DESCRIPTION: WB-606 Workbox overkapping				
SCALE: 1:50	UNITS mm	PROJECTION:	MODIFIED ON: 19-05-2026 MODIFIED BY: HBO MASS: 1017,2 kg	APPROVED ON: 19-05-2026 APPROVED BY: BVB Sheet 1 of 4 / Size: A2

© KROFTMAN STRUCTURES B.V. Duplication and copying without written permission of the owner is prohibited

DRAWING NAME: TCA0311 MODEL VERSION: 1.4

Roof + Closed end wall

-view from the back-

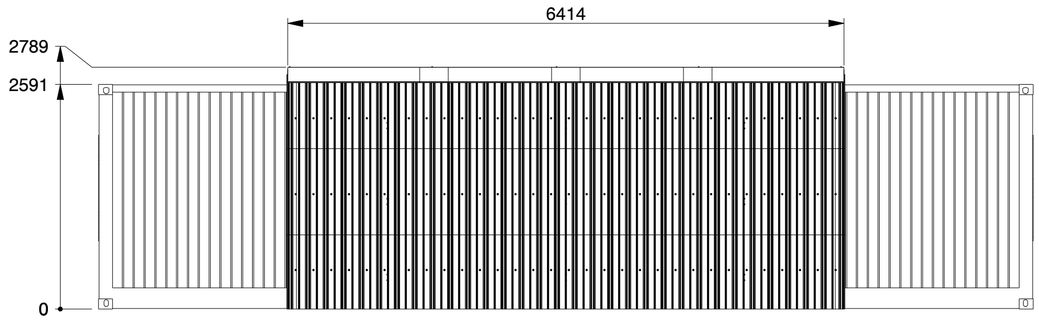

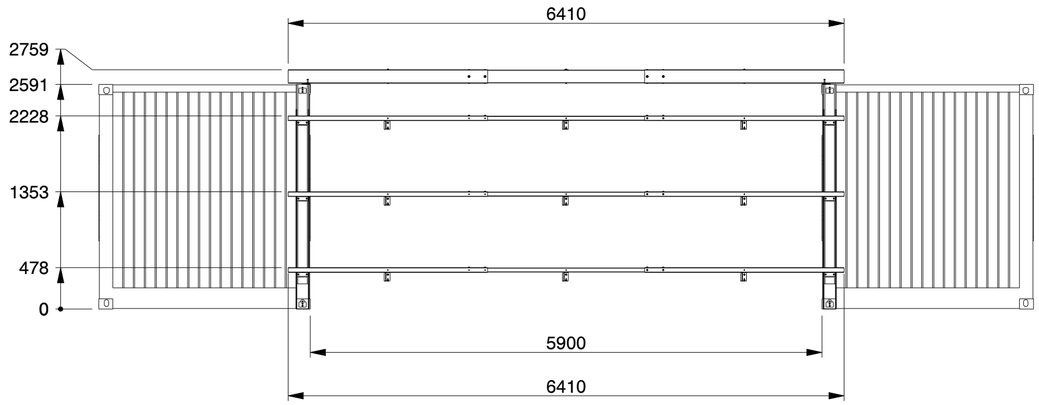

ISO containers

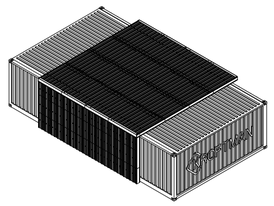

SCALE 1:200

ISO containers

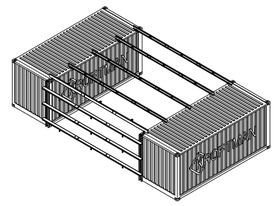

SCALE 1:200

Roof + Closed end wall

-view from the back-

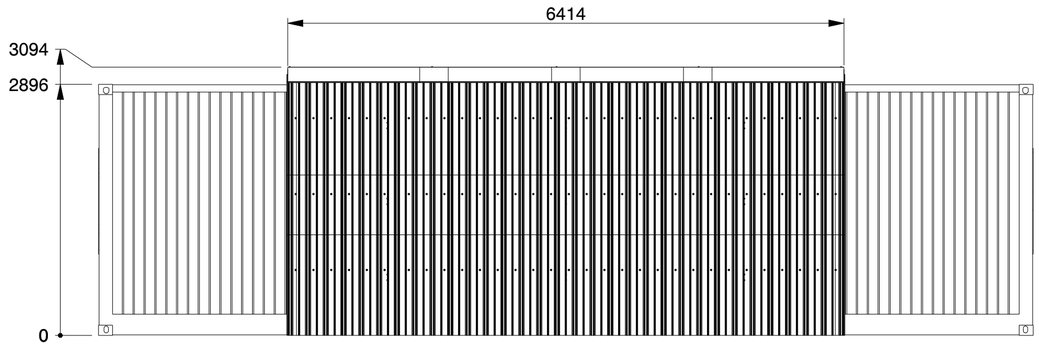

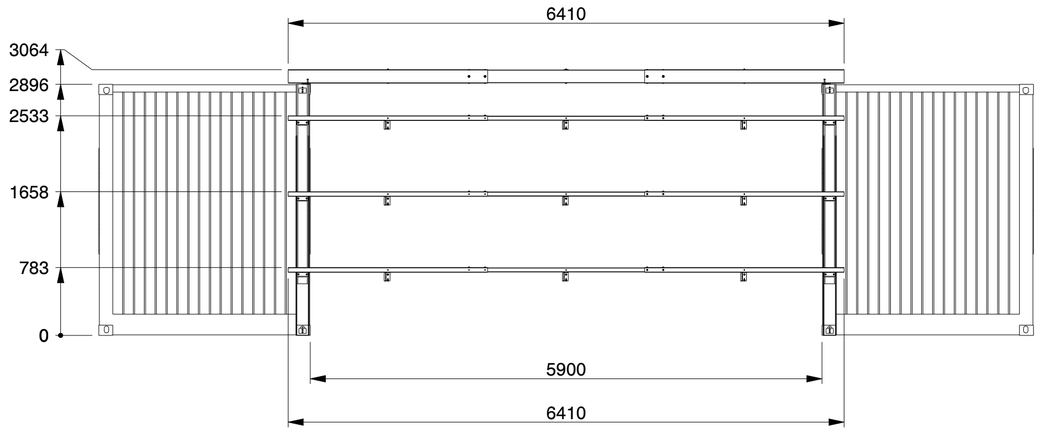

High-Cube containers

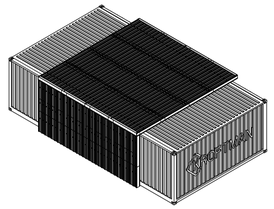

SCALE 1:200

High-Cube containers

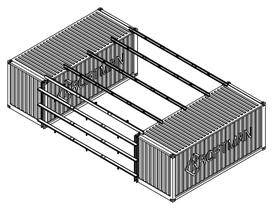

SCALE 1:200

KROFTMAN

LASERCUT ACCORDING: EN-ISO 9013-5-4-1 MATERIAL CERTIFICATE: 3.1 (OR 2.2 WHEN S235JR) GALVANIZING ACCORDING: EN ISO 1461 BEND RADIUS UNLESS DEFINED Ri = t			MATERIAL: See List	
			TREATMENT: None	
TOLERANCES UNLESS OTHERWISE SPECIFIED:			STATUS: Released	
GENERAL ROUGHNESS Ra x	DIMENSION: ±x	ANGLE: ±x°	MODEL NUMBER TCA0311	REVISION: 1
DESCRIPTION: WB-606 Workbox overkapping				
SCALE: 1:50	UNITS mm	PROJECTION:	MODIFIED ON: 19-05-2026 MODIFIED BY: HBO MASS: 1017,2 kg	APPROVED ON: 19-05-2026 APPROVED BY: BVB Sheet 2 of 4 / Size: A2

© KROFTMAN STRUCTURES B.V. Duplication and copying without written permission of the owner is prohibited

DRAWING NAME: TCA0311 MODEL VERSION: 1.4

Roof + Closed end wall

-view from the left side-

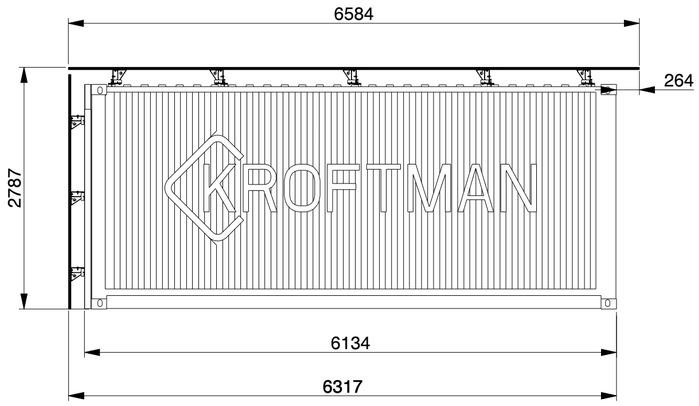

ISO containers

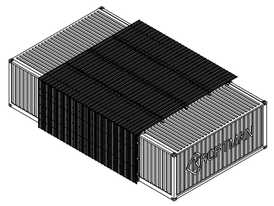

SCALE 1:200

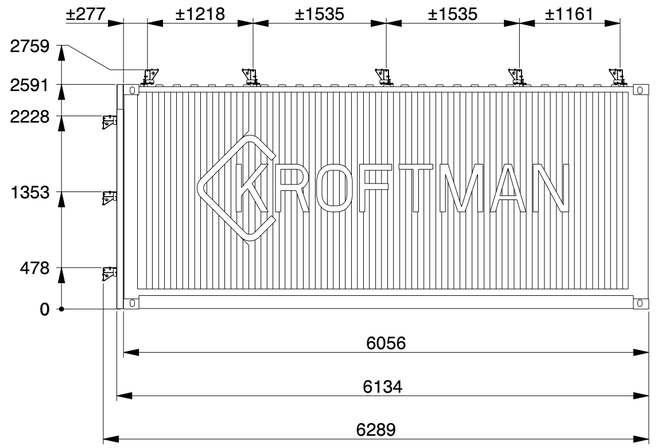

ISO containers

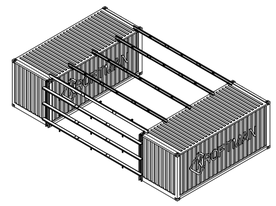

SCALE 1:200

Roof + Closed end wall

-view from the left side-

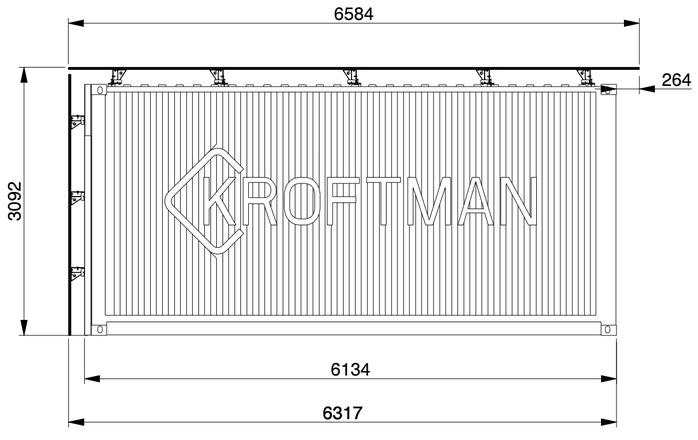

High-Cube containers

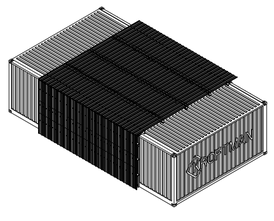

SCALE 1:200

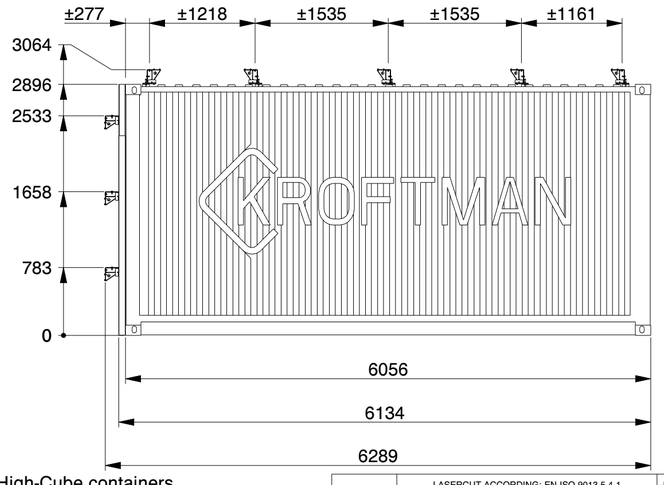

High-Cube containers

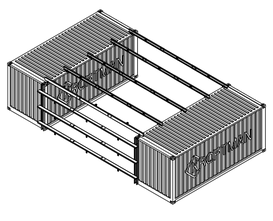

SCALE 1:200

KROFTMAN

LASERCUT ACCORDING: EN-ISO 9013-5-4-1
MATERIAL CERTIFICATE: 3.1 (OR 2.2 WHEN S235JR)
GALVANIZING ACCORDING: EN ISO 1461
BEND RADIUS UNLESS DEFINED Ri = t

MATERIAL: See List

TREATMENT: None

TOLERANCES UNLESS OTHERWISE SPECIFIED:

STATUS: Released

GENERAL ROUGHNESS Ra x	DIMENSION: ±x	ANGLE: ±x°	MODEL NUMBER	REVISION:
			TCA0311	1

DESCRIPTION:

WB-606 Workbox overkapping

SCALE:	UNITS	PROJECTION:	MODIFIED ON: 19-05-2026	APPROVED ON: 19-05-2026
1:50	mm		MODIFIED BY: HBO	APPROVED BY: BVB
			MASS: 1017,2 kg	Sheet 3 of 4 / Size: A2

© KROFTMAN STRUCTURES B.V. Duplication and copying without written permission of the owner is prohibited

DRAWING NAME: TCA0311 MODEL VERSION: 1.4

Roof + Closed end wall

-view from the top side-

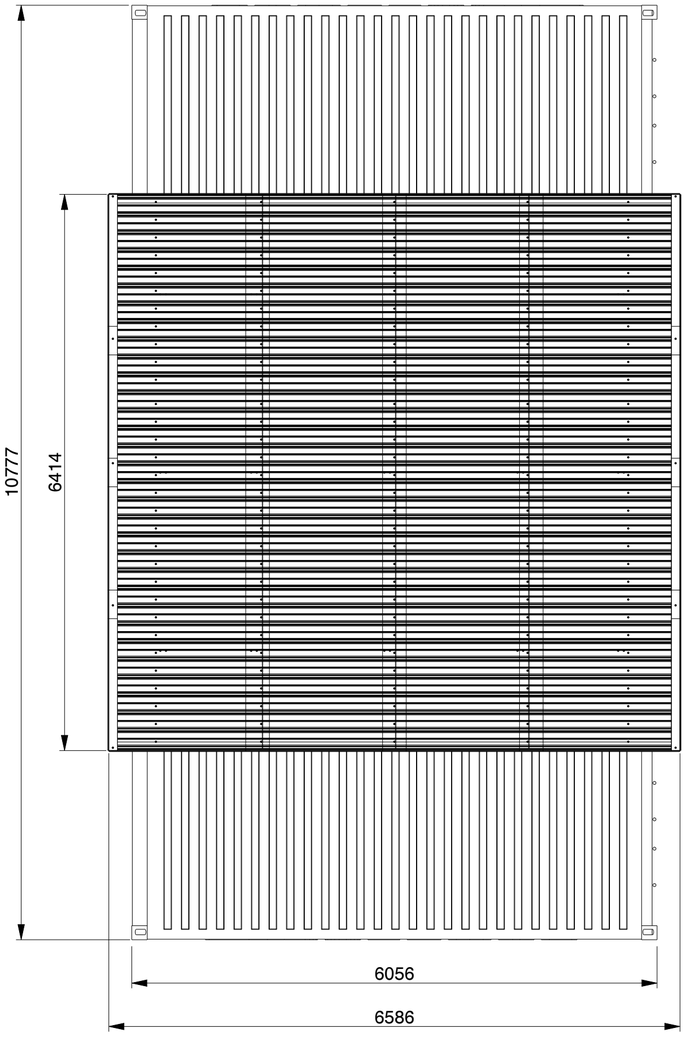

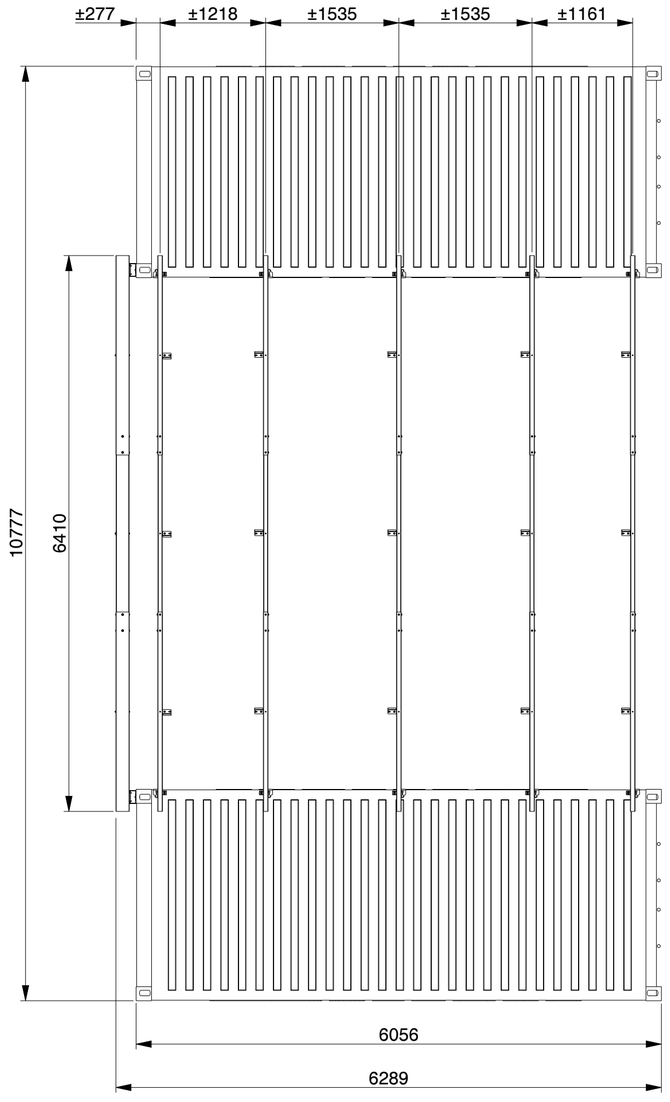

ISO containers

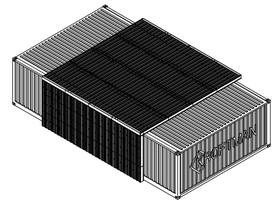

SCALE 1:200

ISO containers

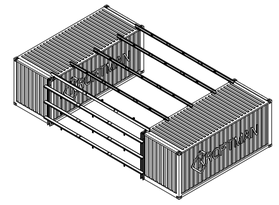

SCALE 1:200

High-Cube containers

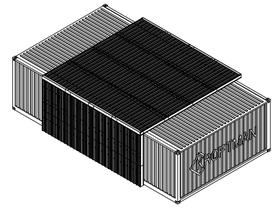

SCALE 1:200

High-Cube containers

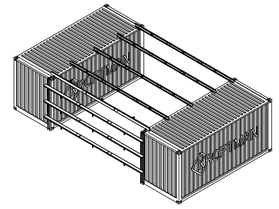

SCALE 1:200

KROFTMAN

LASERCUT ACCORDING: EN-ISO 9013-5-4-1 MATERIAL CERTIFICATE: 3.1 (OR 2.2 WHEN S235JR) GALVANIZING ACCORDING: EN ISO 1461 BEND RADIUS UNLESS DEFINED Ri = t			MATERIAL: See List	
			TREATMENT: None	
TOLERANCES UNLESS OTHERWISE SPECIFIED:			STATUS: Released	
GENERAL ROUGHNESS Ra x	DIMENSION: ±x	ANGLE: ±x°	MODEL NUMBER TCA0311	REVISION: 1

DESCRIPTION:

WB-606 Workbox overkapping

SCALE:	UNITS	PROJECTION:	MODIFIED ON: 19-05-2026	APPROVED ON: 19-05-2026
1:50	mm		MODIFIED BY: HBO	APPROVED BY: BVB
			MASS: 1017,2 kg	Sheet 4 of 4 / Size: A2

© KROFTMAN STRUCTURES B.V. Duplication and copying without written permission of the owner is prohibited

DRAWING NAME: TCA0311 MODEL VERSION: 1.4